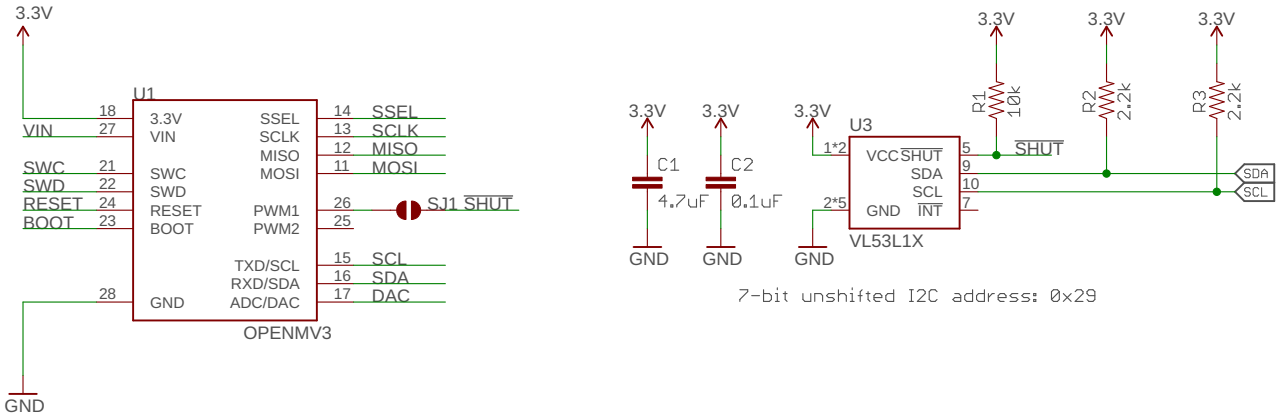

Copyright (c) 2013 Ibrahim Abd Elkader <i.abdalkader@gmail.com>
This work is licensed under the Creative Commons Attribution-ShareAlike 3.0 License.
To view a copy of this license, visit http://creativecommons.org/licenses/by-sa/3.0/

TITLE: distance	
Document Number:	REV: 2
Date: 2019/3/9 ??5:13	Sheet: 1/1